Products

- Optical Communication
  - InGaAs Photodiodes
  - 10GBASE-LRM InGaAs Photodiode Chip
  - InGaAs 10G bps Photodiode Chip
  - Flip-Chip type InGaAs Photodiode
  - Edge Illuminated type InGaAs Photodiode
  - InGaAs ROSA with FPC
  - InGaAs PD-TIA Receivers
  - GaAs Photodiode
  - Silicon PD-TIA Receiver
  - GaAs PD & PD-TIAs
  - Si PIN Photodiodes
  - Si PIN Photodiode Chips
  - Mini Can Si-PD
  - Laser diodes
  - VCSEL TOSA
  - Mini CanVCSEL
  - Packages
  - InGaAs Linear Array
- Optical Sensing and Control

LEDs and Detectors for Measurement,Control and Display

| LED | Plastic Mold LEDs | Si-PD | Si-PTr | Si-APD |

SMD-Type GaN UV Sensor
KPDU34PS1

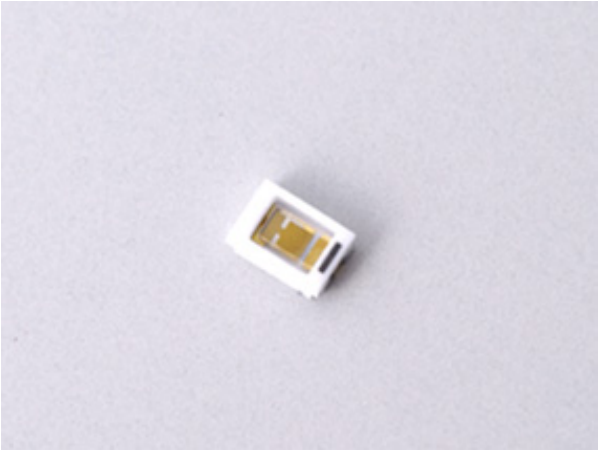

Package Outlines

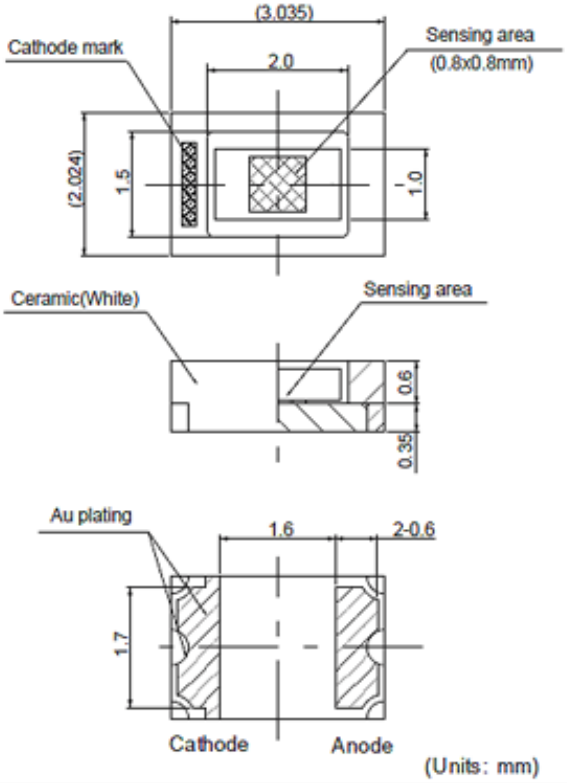

Recommended soldering pattern

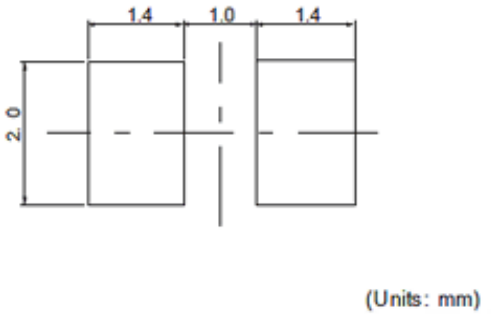

Features

- Wide sensitivity covering both UV-A and UV-B radiations
- Blindness to visible light:Typical sensitivity ratio, S(600nm)/S(340nm)<1/5000
- Low dark current with a photovoltaic mode
- Large sensing area(S=0.8x0.8mm)
- Reliable and small-size surface mount package:2x3x0.95mm(LxWxH)

Applications

- UV sensors
- UV exposure meters
- UV source monitors
- Medical uses

└LEDs
└Plastic Mold LEDs
└Si-PDs
└GaN UV Sensors
└Si-PTrs
└Si-APDs

▸Spherical Micro Solar Cell
└SphelarVoice™
└12-cell Sphelar® module
└Dome type Sphelar® module

- Spectroscopy

Maximum ratings

Item	Symbol	Value	Units
Reverse Voltage	V_R	2	V
Forward Voltage	V_F	2	V
Operating Temperature	T_{opr}	-20 ~ +80	°C
StorageTemperature	T_{stg}	-40 ~ +90	°C
Soldering Temperature	T_{sol}	260(5s max)	°C

Characteristics (Ta=25 ° C unless otherwise noted.)

Parameter	Symbol	Min.	Typ.	Max.	Units	Test Conditions
Active Area	S		0.8x0.8		mm	
Operating Voltage	V_{R0}		0		V	
Sensitive Wavelength	λ	280	340(λ$_P$)	420	nm	λ$_P$ = Peak wavelength
Photocurrent	I_L		60		nA	λ = 320nm, 1mW/cm^2
Dark Current	I_d			1	nA	V_R = 10mV

Typical Characteristics

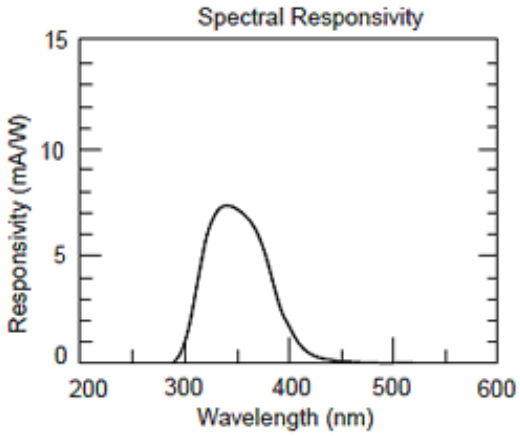

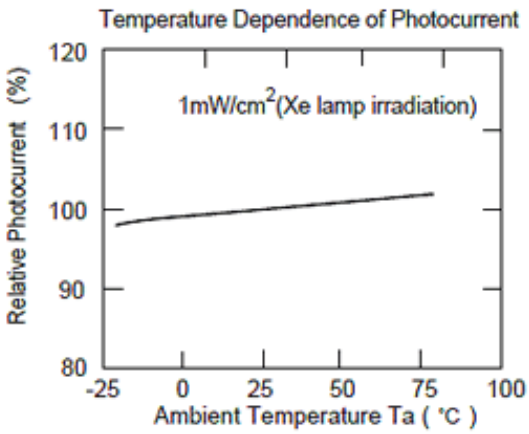

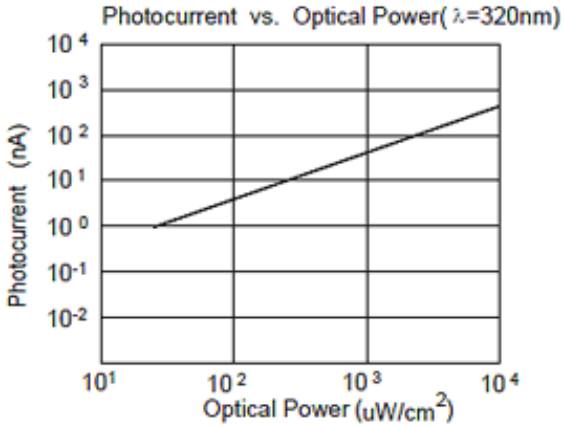

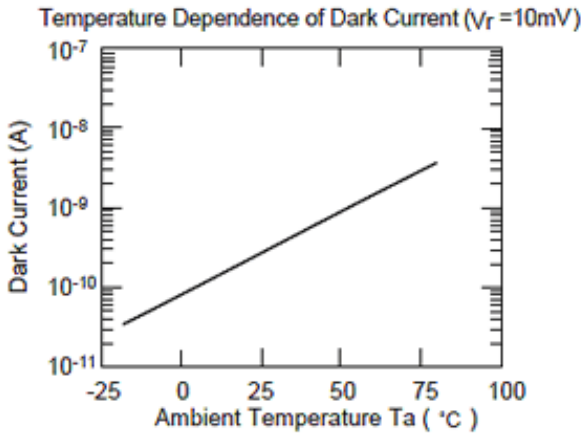

Operation Circuit Examples

Circuit 1 : Standard Amplifier Circuit

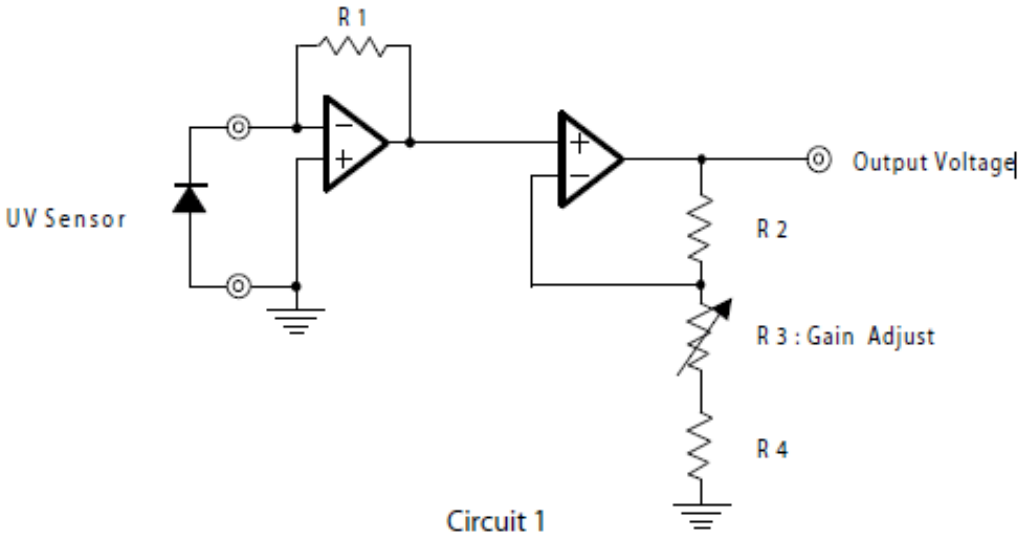

Circuit 1

More than two amplifiers should be used for detecting weak UV signals. As shown in Circuit1 , the circuit is composed of two amplifiers, the first I-V converter and the second non-inverting amplifier. The gain can be adjusted from 100,000 to 1,000,000 times by changing the resistance.

Circuit 2 : Integration Amplifier Circuit

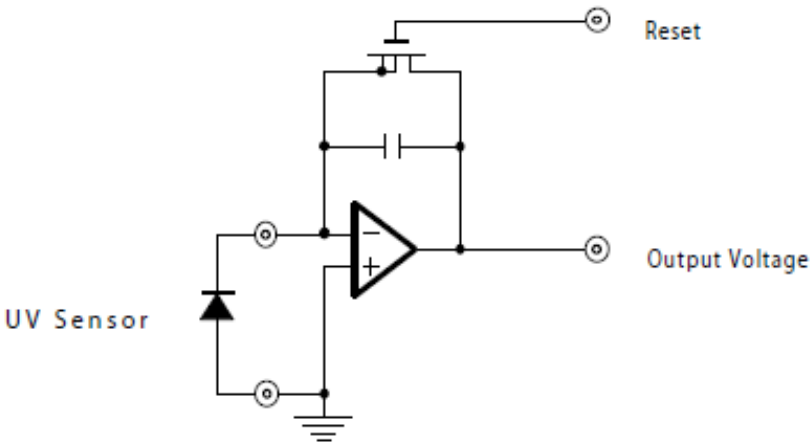

Circuit 2

The integration amplifier shown in Circuit 2 is recommended for detecting weak UV signals. The UV sensor works as a current source. The integration capacitor should have low leak current and dielectric loss as Mylar or polypropylene film capacitor has. The MOS-FET in the reset circuit should have the capacitance much lower than the capacitance of the integration capacitor otherwise zero point will be deviated. Large charge injection from selectings causes zero error. The gain of the amplifier can be adjusted by changing the integration period and the capacitance.

Opening Angle vs Directivity

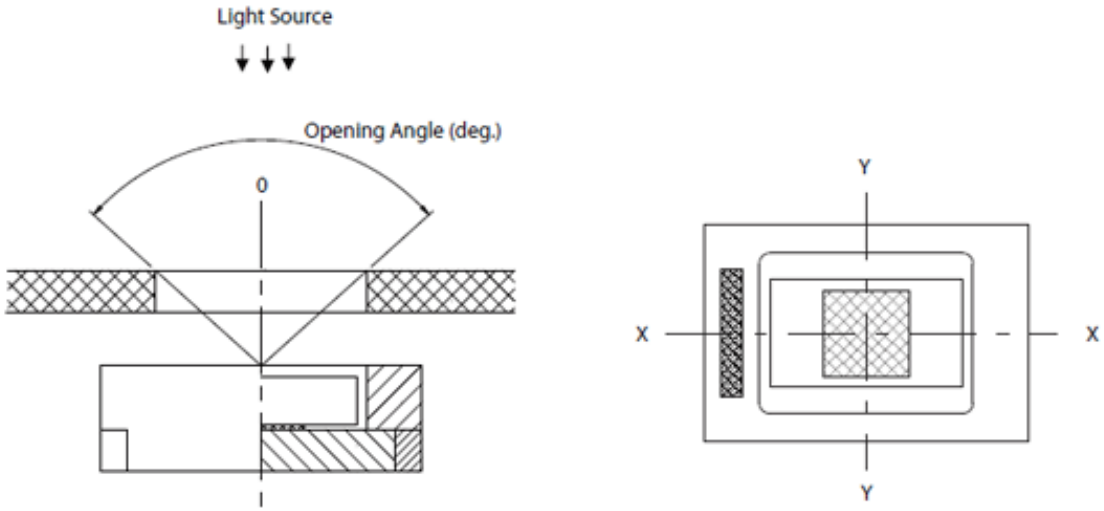

Definition of Opening Angle

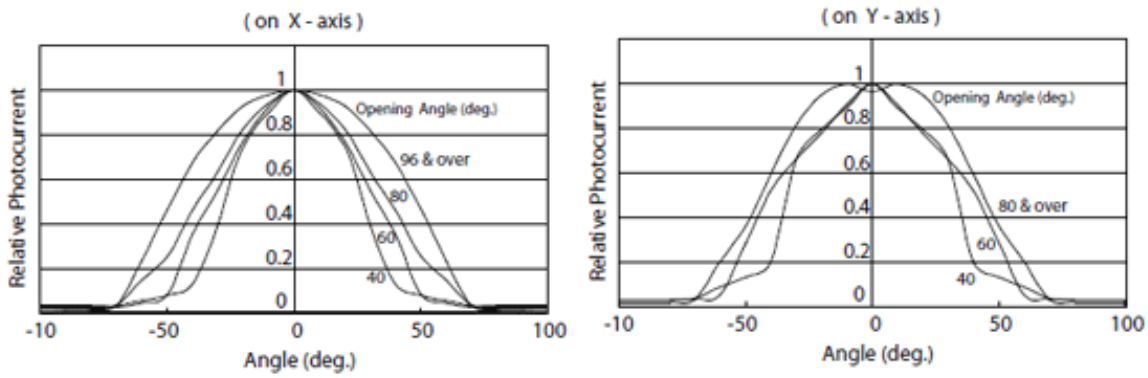

Recommended Opening Angle

X - axis : 96 deg. & Over

Y - axis : 80 deg. & Over

Recommended Reflow Soldering Profile

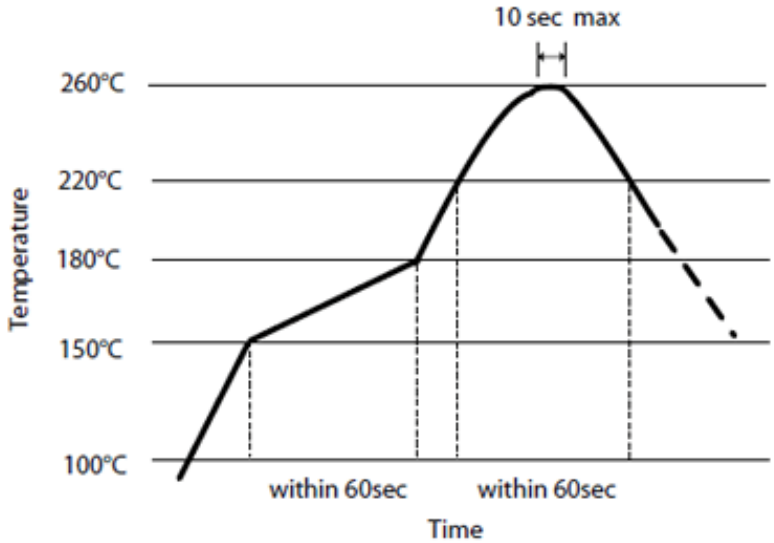

Precautio ns in Use

- This product is designed to be used with general electronic equipment or devices (such as electronic instrumentation, electrical appliance, office equipment).
- Please be sure to consult with our sales staff in advance for special applications such as medical instruments, transportation equipment, spacecraft, fuel controllers and other safety devices which require exceptionally high reliability and if their failure or malfunction may threaten human safety.

< Absolute Maximum Ratings >

- If you operate it over the absolute maximum ratings, it may cause a permanent damage.

< For Assem bly >

- It should be soldered within 7days after unsealing it.
- This product is not so designed that it can be dip-cleaned. When soldering, please pay attention not to adhere flax over the glass surface. If flax is adhered, remove it softly by a cotton containing IPA.
- Handle this product carefully so that a strong power will not be applied to the glass part.

< Counterm easure against Electro-static >

To protect from electro-static,

- Use a wrist strap or anti-electrostatic gloves for handling.
- When an automatic device is used,

a) Minimize the friction against the carrier devices.
b) With the process that this product may be charged by electro-static, use an ionize to neutralize.
c) Use e.g. VDT filter with CRT monitors to avoid the electro-static and do not turn them on / off as much as possible since it could be a cause of the charging.

| LED | Plastic Mold LEDs | Si-PD | Si-PTr | Si-APD |

Copyright © 2005 Kyosemi Corporation. All Rights Reserved.